Telephone General: 01522 875555 Equipment Sales: 01522 875500 Spares: 01522 875510 Service: 01522 875520
Fax National: 01522 875530 Fax International: +44 1522 875530

Company registered in England
Registered office: Whisby Road

number 2175448
Lincoln LN6 3QZ

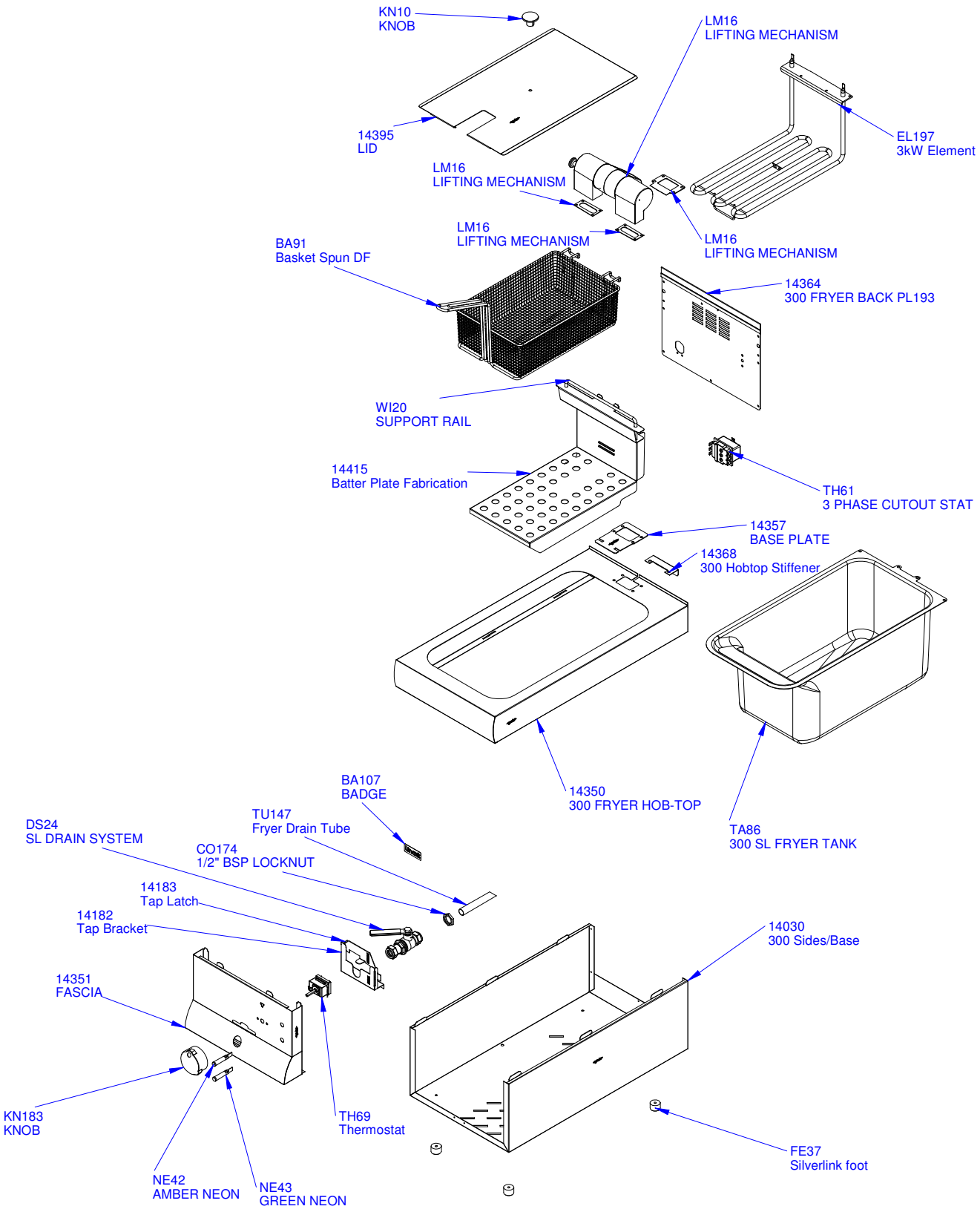

©18/10/2008 LINCAT LIMITED,
WHISBY ROAD, LINCOLN, LN6 3QZ

DF33 Fryer

DWG No.	14354	ECN 0 05/03/2004	cliff stanton

Saved as DF33-A003 spares.dft